ALPHA MICROSYSTEMS
RIGHT. FROM THE START

AM-647

Digital Audio Tape(DAT) High Capacity Tape Drive Installation Instructions

PDI-00647-00,Rev.A04

© 1995 Alpha Microsystems

REVISIONS INCORPORATED	
REVISION	DATE
00	Jan. 1992
01	Feb. 1992
02	Apr. 1993
03	July 1994
04	Aug. 1994

AM-647 DAT High Capacity Tape Drive Installation Instructions
To re-order this document, request part number PDI-00647-00.

The information contained in this manual is believed to be accurate and reliable. However, no responsibility for the accuracy, completeness or use of this information is assumed by Alpha Microsystems.

This document may contain references to products covered under U.S. Patent Number 4,530,048.

The following are registered trademarks of Alpha Microsystems, Santa Ana, CA 92799:

AMIGOS	AMOS	Alpha Micro	AlphaACCOUNTING
AlphaBASIC	AlphaCALC	AlphaCOBOL	AlphaFORTRAN 77
AlphaLAN	AlphaLEDGER	AlphaMAIL	AlphaMATE
AlphaNET	AlphaPASCAL	AlphaRJE	AlphaWRITE
CASELODE	OmniBASIC	VER-A-TEL	VIDEOTRAX

The following are trademarks of Alpha Microsystems, Santa Ana, CA 92799:

AlphaBASIC PLUS	AlphaVUE	AM-PC	AMTEC
DART	ESP	MULTI	inSight/am
inFront/am			

All other copyrights and trademarks are the property of their respective holders.

ALPHA MICROSYSTEMS
2722 S. Fairview Street
P.O. Box 25059
Santa Ana, CA 92799

TABLE OF CONTENTS

1.0 INTRODUCTION 1

2.0 PRODUCT DESCRIPTION 1

3.0 TOOLS REQUIRED 2

4.0 PREPARING THE DAT DRIVE FOR INSTALLATION 2

5.0 SCSI TERMINATION USING EXTERNAL TERMINATOR OPTION 5
5.1 Termination Procedure (Without External Terminator) 6

6.0 TERMINATION POWER 6

7.0 DAT TAPE DRIVE INSTALLATION INSTRUCTIONS 8

8.0 DAT INSTALLATION (PEDESTAL AND RACK MOUNT COMPUTERS) 9
8.1 Front Bezel Removal and Installation 9
8.2 Building and Installing the DAT Drive Mounting Assembly 10
8.3 Power and Interface Cables 14

9.0 DAT INSTALLATION (AM-1400 AND AM-1600 COMPUTERS) 15

10.0 DAT INSTALLATION (UNIVERSAL VME AND
SINGLE BOARD COMPUTERS) 18

11.0 SOFTWARE INFORMATION FOR AM-647 DAT DRIVES 19
11.1 Copying the Device Driver Program 20
11.2 Modifying the System Initialization Command File 20
11.2.1 Modifying the Device Table 21
11.3 Testing the Initialization File 22
11.4 Warm Booting 22
11.5 Initial System Testing 23

12.0 AM-647 DAT DRIVE STATUS LEDS 24

13.0 USING YOUR AM-647 DAT DRIVE 25

14.0 MAINTENANCE 27

15.0 DDS TAPE USAGE AND CAPACITY 27

16.0 ADDITIONAL DOCUMENTATION 28

1.0 INTRODUCTION

This document describes the installation of an AM-647 **D**igital **A**udio **T**ape (**DAT)** SCSI High Capacity Tape Drive into an existing Alpha Micro Computer System.

Those wishing to install the AM-647 into an external subsystem will need to use the installation instructions shipped with the subsystem. If you are installing an AM-647 DAT drive in a Series 90 computer, installation instructions are included in the Series 90 SCSI tape drive controller documentation.

The instructions are written for an experienced Alpha Micro Service Technician, so if you do not feel comfortable performing the hardware and software procedures discussed below, please contact your Alpha Micro dealer or the Alpha Micro Technical Support Group for help.

Installing an AM-647 is simply a matter of placing the tape unit inside your computer chassis and interconnecting it with your computer. Installation is complete when a software driver is created and identified using system software commands, and when your system initialization command file is modified to include the AM-647 tape drive.

2.0 PRODUCT DESCRIPTION

The AM-647 DAT drive can be mounted in any 5-1/4" configuration. The small 4mm magnetic tape used in the AM-647 DAT drive has a data capacity of approximately 2-gigabytes. However, your data capacity may vary depending on the number and type files you are saving to the tape.

The product package consists of a SCSI compatible DAT tape drive and mounting kit. What is included in your mounting kit will depend on what type of computer you have. The chart below shows what type of mounting kit goes with your type of computer:

System Type	Mounting Kit
VME Rack Mount	PDB-00625-60
VME Pedestal	PDB-00625-61
AM-2000M/AM-3000M	PDB-00625-61
AM-1400/AM-1600	PDB-00647-50
AM-990 VME and SBC	Not required
Eagle Deskside	Not required
AM-1600 Deskside	Not required

Make sure you have the correct mounting kit before you begin. The DAT drive has the same environmental specifications as your computer.

3.0 TOOLS REQUIRED

For most installations, the only tools you will need to install the DAT drive is a #2 phillips-head screwdriver and a pair of needle-nose pliers.

4.0 PREPARING THE DAT DRIVE FOR INSTALLATION

First, you need to verify your SCSI address is set correctly (See Figure 1). On the back of your DAT drive is a SCSI device select area. If you want to be able to warm boot from your DAT drive, it must be set to a numerically higher SCSI ID than any other magnectic tape device on the bus. If you have a Roadrunner, AM-4000, or AM-540 enhanced AM-3000M computer, you have seven SCSI IDs to choose from (0 through 6). All other Alpha Micro AMOS based computers support SCSI IDs 0 through 3. Don't worry if you have a gap in your device addressing, the Alpha Micro Operating System doesn't require that each device be defined in sequence.

There are two different types of DAT drives. Figure 1 shows a 3-1/2" drive factory mounted in a 5-1/4" frame. Figure 1A shows a 5-1/4" half-height DAT drive. The termination power jumper and configuration switch settings are the same for both types of tape drives. See the applicable illustration for the location of the jumper and switches.

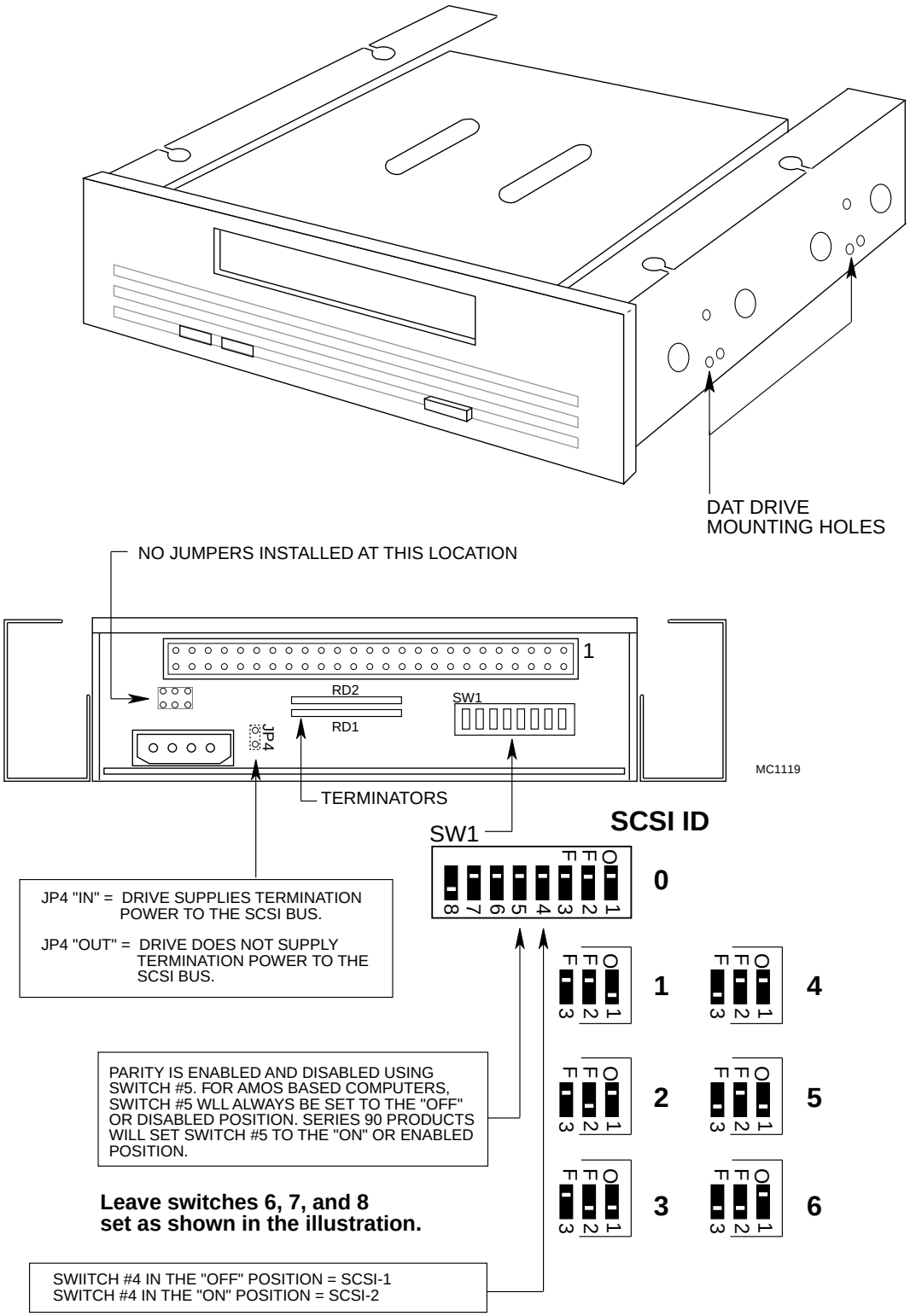

Figure 1—AM-647 Configuration Type 1

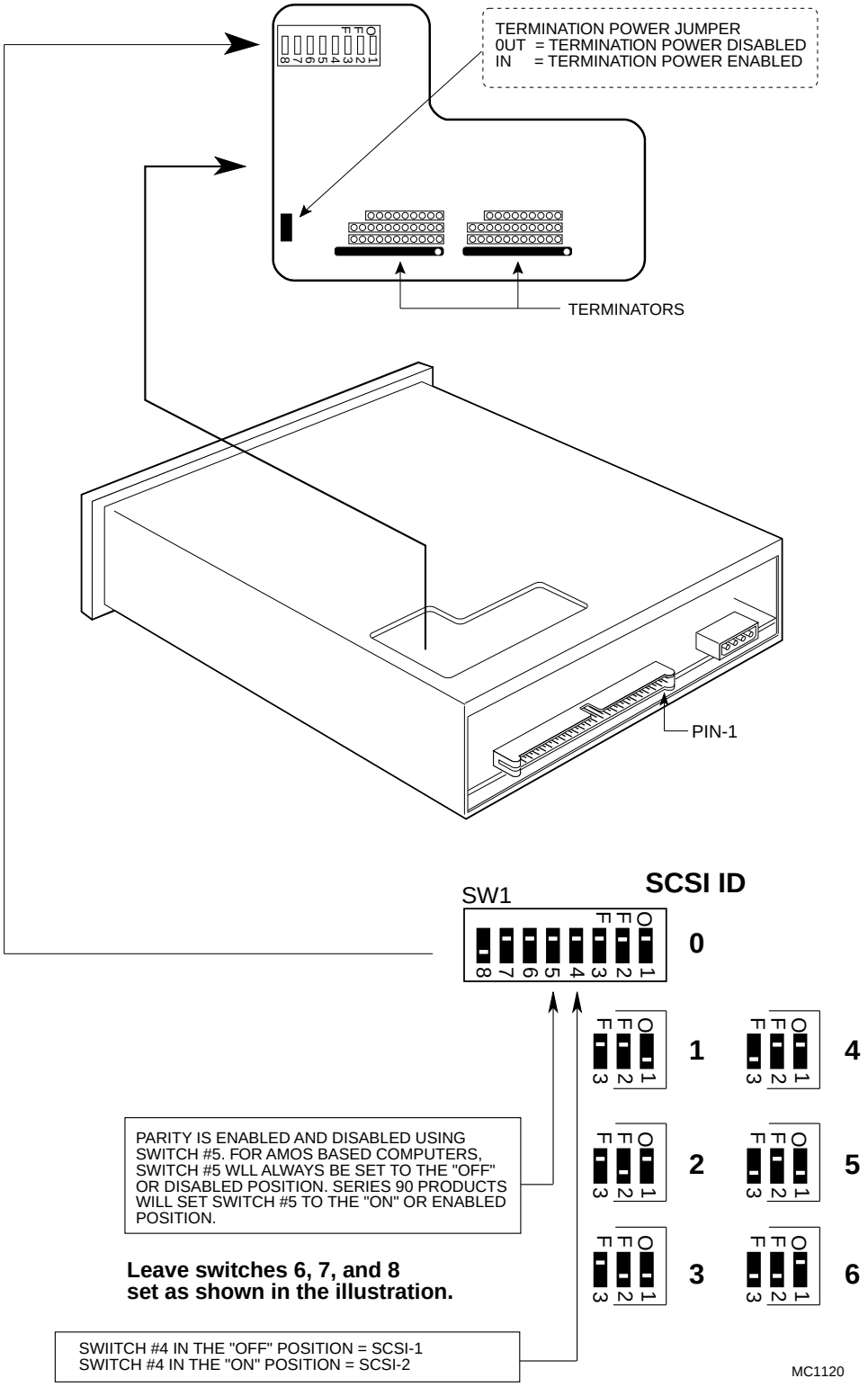

Figure 1A—AM-647 Configuration Type 2

5.0 SCSI TERMINATION USING EXTERNAL TERMINATOR OPTION

The preferred method of terminating the SCSI bus in an AMOS based computer is the installation of an external terminator. In Early April of 1993, the external SCSI bus terminator became standard on all AMOS based computer configurations. Using an external terminator makes the task of installing an add-on subsystem (like a portable CD-ROM drive) easier, eliminating the necessity of removing terminators from a SCSI device located in the host computer.

External terminators are available from Alpha Micro under part number PRA-00222-00.

To use the external terminator, you need to insure none of your SCSI peripherals inside the computer are terminated. You will also need to follow the guidelines in the section on providing termination power for the SCSI bus.

If you have a 10 or 21-slot rack mount VME computer and want to install an external terminator, you will need to order a special adapter cable, DWB-10200-01. The adapter cable is required, because there is no external SCSI connector on these computers. The special cable has a connector that is compatible with the external terminator and would also allow easy access to your computer for a portable CD-ROM drive or other SCSI subsystem.

The external terminator is shown in below:

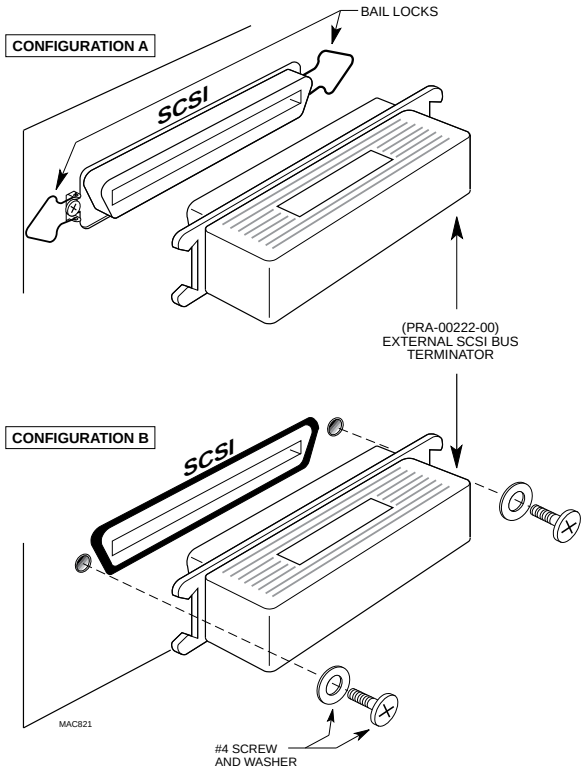

External Terminator Installation

The illustration shows two different types of external SCSI connectors:

1. Configuration "A" shows an extended external SCSI connector and bail locks for holding the terminator in place. This configuration is used on almost all of Alpha Micro's currently available product. The terminator is installed by sliding it over the connector and then latching the bail locks into the notches in the terminator.

2. Configuration "B" shows a flush mounted external SCSI connector. The only product Alpha Micro currently offers using a flush mounted external SCSI connector is the pedestal (also known as the "Classic") chassis. In this configuration, the terminator inserts into a cutout in the sheet metal and over the SCSI connector. The terminator is held in place with two #4 screws and washers.

5.1 Termination Procedure (Without External Terminator)

1. All AMOS based computers (with or without Roadrunner upgrades) with one SCSI hard disk drive must have that hard disk drive installed with its terminators installed.

2. All AMOS based computers (with or without Roadrunner upgrades) with more than one SCSI device must insure that only the last SCSI device, the device attached to the connector located farthest down the cable away from the CPU, board has its terminators installed. Any other SCSI devices must have their terminators removed.

3. All AMOS based computers (with or without Roadrunner upgrades) which have a SCSI magnetic tape drive as their only SCSI device must have the tape drive configured with its terminators installed.

4. For subsystem installations used in AMOS based applications, the last SCSI device attached to the connector located farthest down the cable away from the host computer must have its terminators installed.

6.0 TERMINATION POWER

In order to properly control SCSI bus termination, a termination power source must be provided; **this is especially important when using an external terminator.**

Why is Termination Power so important when using an external terminator?

In order for terminators to do their job, they must have a power source. In most (but not all) cases, a SCSI peripheral will supply termination power to its own on-board terminators, even if the SCSI host controller or no other SCSI peripheral is supplying

termination power to the SCSI bus. However, for an external terminator to be effective there has to be termination power supplied to the SCSI bus. If no termination power is available, the external terminator is not going to do its job, which means your SCSI bus is not terminated. This may result in a computer that either won't boot or once booted may tend to hang frequently. Because SCSI-2 devices transfer data at a higher rate, they are more prone to display problems when improperly terminated.

The termination power source can be configured in one of two ways, depending on your application:

- AMOS based computers with SCSI-2 implementation (i.e., AM-4000 computers, AM-540 enhanced AM-3000M computers, all Roadrunner enhanced computers, etc) should be configured to supply termination power via the host controller. When termination power is supplied by the host controller, it is not necessary to have one of your internally mounted SCSI peripherals configured to supply termination power to the SCSI bus.

- AMOS computers using the 50-pin SASI bus, which includes non-SCSI-2 enhanced AM-1000, AM-1200, AM-1400, AM-1600, AM-2000, AM-2000M, AM-3000, and AM-3000M computers, require that one of the internally mounted peripherals be configured to supply termination power to the SCSI bus.

SCSI-2 Bus Termination Power Guidelines

Use these guidelines for supplying termination power to AM-4000 computers, Roadrunner enhanced computers, AM-540 enhanced AM-3000M computers, etc:

1. AMOS based computers with SCSI-2 implementation will be configured with the host controller supplying termination power to the SCSI bus.

2. When the SCSI host controller is supplying termination power, you want your internally mounted SCSI peripherals to be configured so they do not supply termination power.

3. If a computer with one or more SCSI peripherals is cabled to a subsystem with additional SCSI devices, the SCSI devices in the subsystem should be configured so they **do not** supply termination power. Ideally, you want the SCSI host controller in the main system to be the sole source of termination power.

The termination power guidelines described above are valid even when you are using SCSI peripherals that do not support SCSI-2 protocol.

The SCSI host controller on AM-190 and AM-540 boards is permanently configured to supply termination power to the SCSI bus. On Roadrunner boards, the termination power feature can be enabled or disabled by setting a jumper. As of 07/26/94, Alpha Micro began configuring all Roadrunner boards with termination power enabled. See the Roadrunner installation instructions for information on how to configure the termination power jumper.

SASI Bus Termination Power Guidelines

Use the following guidelines to determine which peripheral will be used to supply termination power for the 50-pin SASI bus:

1. Whenever possible, only one SCSI peripheral will be configured to supply termination power to the SASI bus.

2. If a computer has more than one SCSI peripheral and at least one of those peripherals is a disk drive, one disk drive will be configured to supply termination power to the bus. The other disk or tape SCSI devices will be configured so they do not supply termination power.

3. If a computer does not have a SCSI disk drive, but does have one or more SCSI magnetic tape or CD-ROM drives, then one of these devices will be configured to supply termination power.

4. If a computer with one or more SCSI peripherals is cabled to a subsystem with additional SCSI devices, one SCSI device in the host computer would normally be configured to supply termination power for the bus.

   You should avoid having a SCSI device in both the host computer and the subsystem configured to supply termination power. Ideally, you want the source of the termination power for the bus to be supplied by **one power source**.

For information on how to configure terminator power on SCSI hard disk and magnetic tape peripherals, see the following documents:

- Each SCSI disk drive shipped by Alpha Micro has a one page notice with jumper configuration information, including instructions on how to configure termination power.

- *AM-62X SCSI 1/4" Streaming Tape Drive Installation Instructions*, PDI-00625-00, revision A07 or later.

- *AM-647 DAT Tape Drive Installation Instructions,* PDI-00647-00, revision A04 or later.

7.0 DAT TAPE DRIVE INSTALLATION INSTRUCTIONS

The sections that follow contain information for installing the DAT drive in the following configurations:

1. Rack mount VME computers.

2. VME and single board pedestal "Classic" computers.

3. AM-1400 and AM-1600 computers.

The computer owner's manuals for Eagle, AM-1600 Deskside, and AM-990 computers contain their own set of instructions for installing SCSI peripherals.

8.0 DAT INSTALLATION (PEDESTAL AND RACK MOUNT COMPUTERS)

The following sections describe how to install the DAT drive into AMOS based computers using both rack mount and pedestal enclosures. The basic installation procedure is the same for both pedestal and rack mount computers:

- Removing your old front bezel.
- Removing the display panel assembly from your old bezel.
- Installing the display panel assembly in your new bezel.
- Installing the new bezel on your computer.
- Building the DAT drive mounting assembly.
- Installing the DAT drive mounting assembly in your computer.
- Attaching the 50-pin interface and power cables.

8.1 Front Bezel Removal and Installation

Your AM-647 product installation kit includes a new front bezel. The new front bezel will have a single half-high 5-1/4" cutout if you are only installing a single DAT drive; or it will have a full-high 5-1/4" cutout if you are installing your DAT drive in conjunction with a new (or existing) diskette drive or a Tandberg streaming tape drive.

1. Use the instructions in your computer owner's manual for removing the computer's top cover.

2. Unplug the ribbon cable that links the display panel on the computer's front bezel to your CPU board.

3. Remove the phillips-head screws holding the front bezel to the computer's chassis.

4. On the front of the computer's display panel there is a small plastic plug that conceals a phillips-head screw. Remove the plastic plug and loosen the phillips-head screw, this will allow you to separate the display panel assembly from the front bezel.

5. Install the display panel assembly into the new front bezel, which is included in your product installation kit.

6. Install the new front bezel and display panel assembly onto your computer chassis.

7. Plug the display panel cable back into your CPU board.

8.2 Building and Installing the DAT Drive Mounting Assembly

The drive mounting assembly is the same for both pedestal and rack mount computers. The assembly consists of three pieces; one plastic mounting base, one DAT drive, and one metal support bracket. The following steps describe how the assembly is put together:

1. The drive sets on top of the plastic mounting base with its status LEDs located nearest the plastic mounting base. This will insure the drive is in its proper operational position for both pedestal and rack mount computers. See Figure 2.

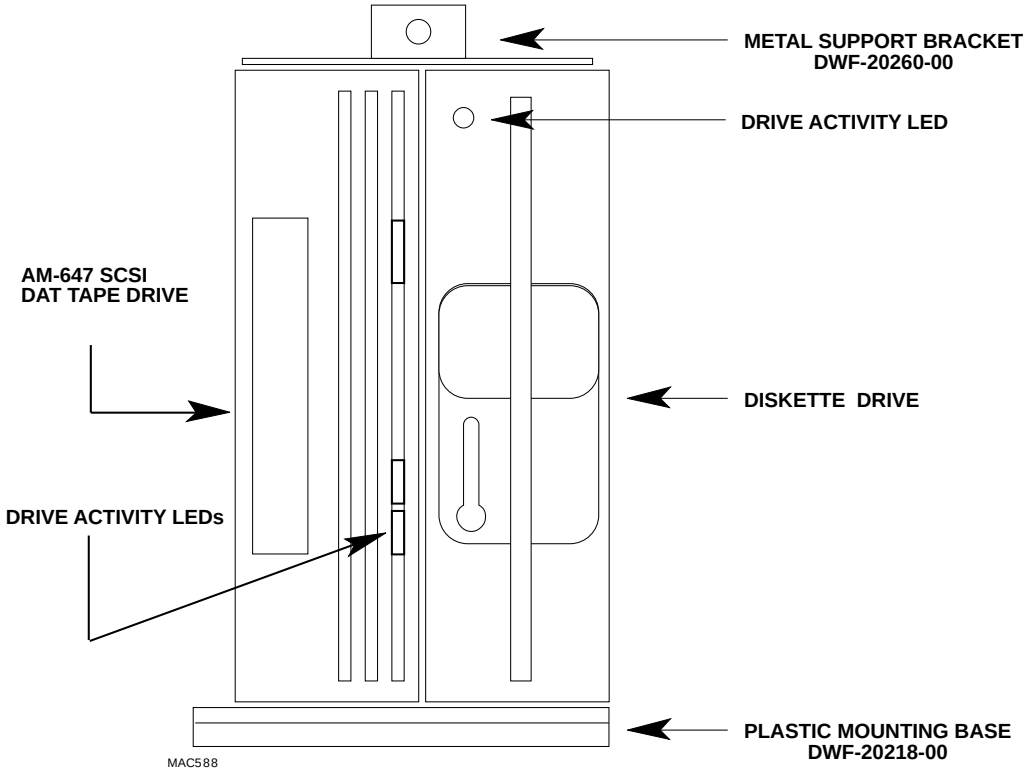

Figure 2. DAT Tape Drive Mounting Assembly

2. The DAT drive has a number of mounting screw-holes on its side. The screw holes we need for this installation are shown in Figure 1.

3. There is a corresponding set of holes in the plastic mounting base (shown in Figure 3) designed for the AM-647. Align the screw holes on the drive with the designated holes in the plastic mounting base. Make sure the drive's front panel is pointed in the direction indicated by the arrow in Figure 3.

4. Install the two screws (included in the mounting kit) that hold the plastic mounting base to the drive. If you are installing a diskette drive or a 1/4" streaming tape drive along with your DAT drive, this drive would be mounted next to the DAT drive, as shown in Figure 2.

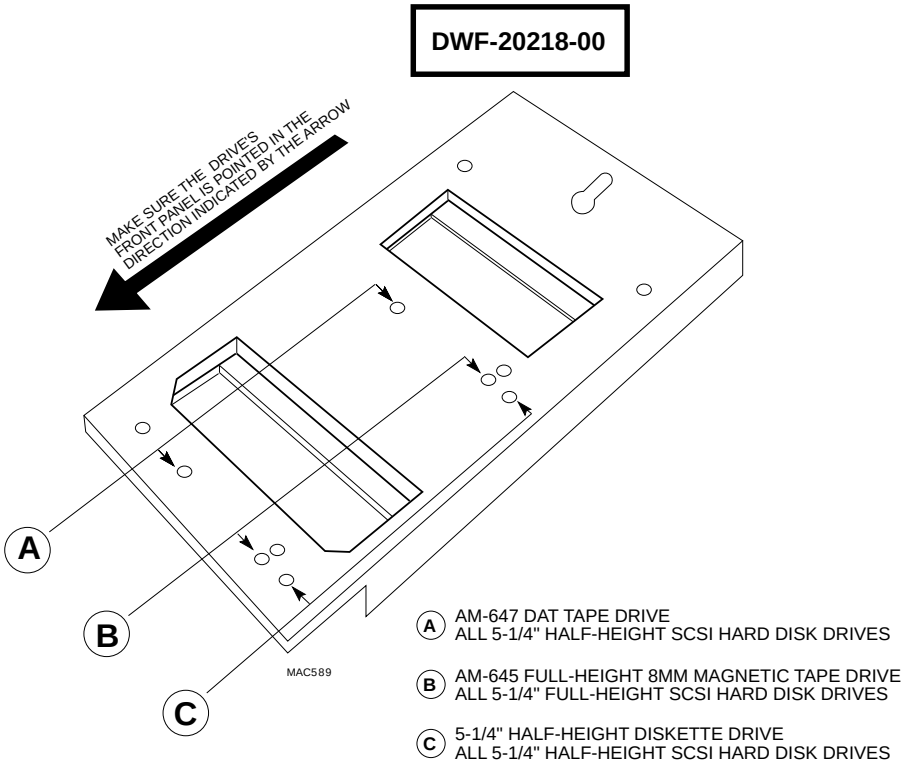

Figure 3. Plastic Mounting Base

5. Set the drive assembly into its mounting position inside the chassis.

6. The metal support bracket sets on top of the drive assembly as shown in Figure 2. Position the bracket so the mounting hole shown in Figure 4 aligns with the screw hole on the side of the DAT drive. At the same time, the screw hole in the metal support bracket designed to attach the drive assembly to the front bezel must also be in alignment with the screw hole in the front bezel.

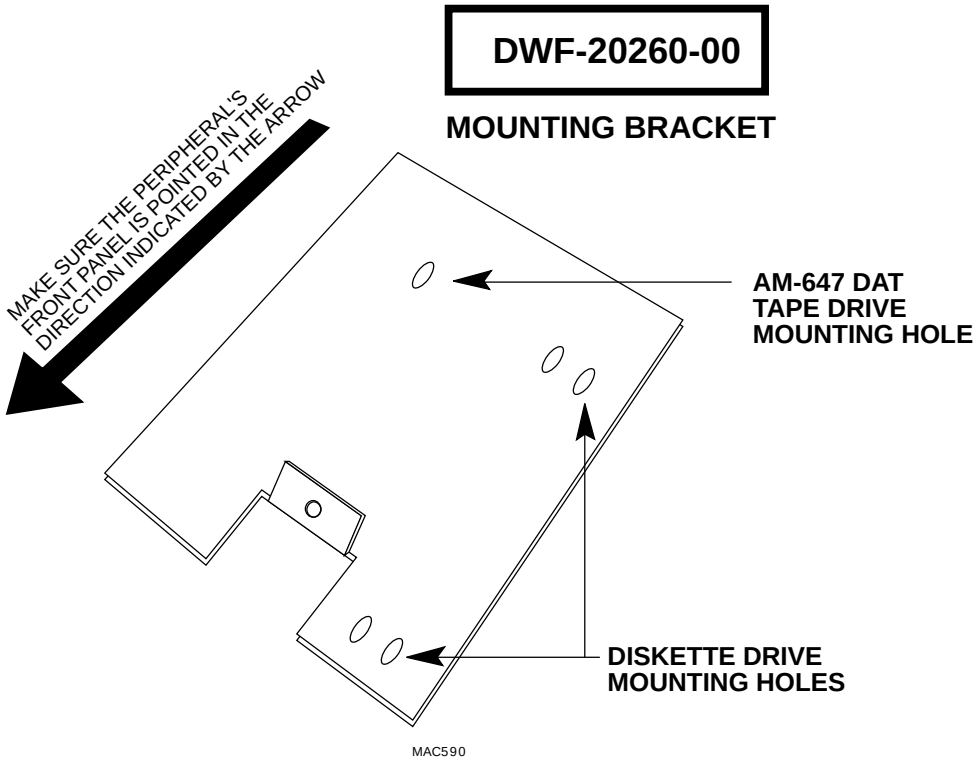

Figure 4. Metal Support Bracket

7. Because the DAT drive internally ties logic ground to its frame, it is necessary to isolate the DAT drive from the computer chassis. There are two metal shoulder washers (part number HDW-10004-07) that must be used to ensure that the metal support bracket does not make contact with the conductive coating on the front bezel. Please refer to the Figure 5 for correct installation of the shoulder washers when mounting the unit.

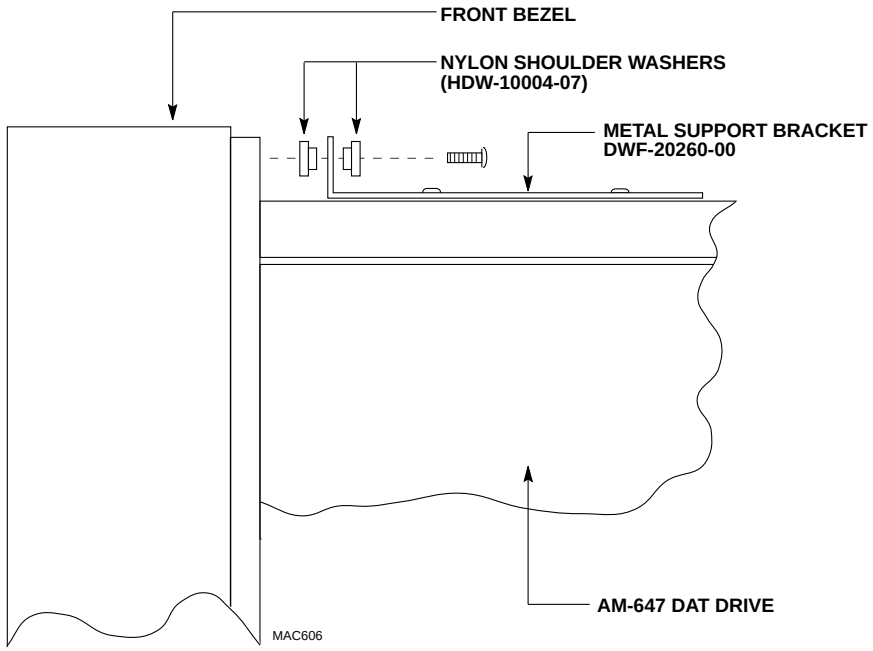

Figure 5

8. Before you tighten the screw holding the DAT drive to the metal support bracket, make sure you are satisfied with the way the drive assembly is aligned with the cutout in your computer's front bezel. Once the drive (or drives) are properly positioned, install the screw that holds the plastic mounting base to the chassis bottom and tighten the screw holding the drive (or drives) to the metal support bracket.

8.3 Power and Interface Cables

Single Board Pedestal Computers

The 50-pin SCSI cable is already installed in your computer. Simply plug the 50-pin cable into the back of the drive, making sure the red stripe on the cable aligns with pin-1 on the drive. Plug the 4-pin keyed power cable into the corresponding keyed connector on the back of the drive.

VME Pedestal Computers

VME pedestal computers use a DWB-10193-04 cable to connect SCSI or ST-506 peripherals to either the 50-pin CPU SCSI port or an AM-515 Intelligent SCSI disk controller.

If your computer **does not have** an AM-515 controller board, there will be a 50-pin connector available to plug the DAT drive into. Simply plug the 50-pin cable into the back of the drive, making sure the red stripe on the cable aligns with pin-1 on the drive. Plug the 4-pin keyed power cable into the corresponding keyed connector on the back of the drive.

If your internal SCSI or ST-506 drives are controlled by an AM-515 board, you will not be able to use the DWB-10193-04 cable to install your DAT drive. Instead, you will need to order a special cable assembly (PDB-10200-00) that connects between the CPU's 50-pin SCSI connector and the 50-pin connector on the back of the DAT drive. Make sure the red stripe on the cable is aligned with pin-1 on both the CPU board and the DAT drive.

VME Rack Mount Computers

VME pedestal computers use a DWB-10193-05 cable to connect SCSI or ST-506 peripherals to either the 50-pin CPU SCSI port or an AM-515 Intelligent SCSI disk controller.

If your computer has an internal SCSI or ST-506 drive, but **does not have** an AM-515 controller board, there will be a 50-pin connector available to plug the DAT drive into. Simply plug the 50-pin cable into the back of the drive, make sure the red stripe on the cable aligns with pin-1 on the drive. Plug the 4-pin keyed power cable into the corresponding keyed connector on the back of the drive.

If your internal SCSI or ST-506 drives are controlled by an AM-515 board, you will not be able to use the DWB-10193-05 cable to install your DAT drive. Instead, you will need to order a special cable assembly (PDB-10200-00) that connects between the CPU's 50-pin SCSI connector and the 50-pin connector on the back of the DAT drive. Make sure the red stripe on the cable is aligned with pin-1 on both the CPU board and the DAT drive.

You may have a rack mount computer that does not have any internal peripherals. If this is the case, your computer may not have the DWB-10193-05 50-pin cable. To install the DAT drive, you will need to order and install the special cable assembly PDB-10200-00, described in the previous paragraph.

9.0 DAT INSTALLATION (AM-1400 AND AM-1600 COMPUTERS)

The first step in the installation is to remove the four phillips head screws (two on each side) that hold the top cover in place. Remove the top cover and place it in an area where it won't get damaged. Next, remove the four screws that hold the drive mounting bracket in place. The drive mounting bracket is shown in Figure 6. The four screws are located at positions A, B, C, and D. Remove the mounting bracket from the chassis.

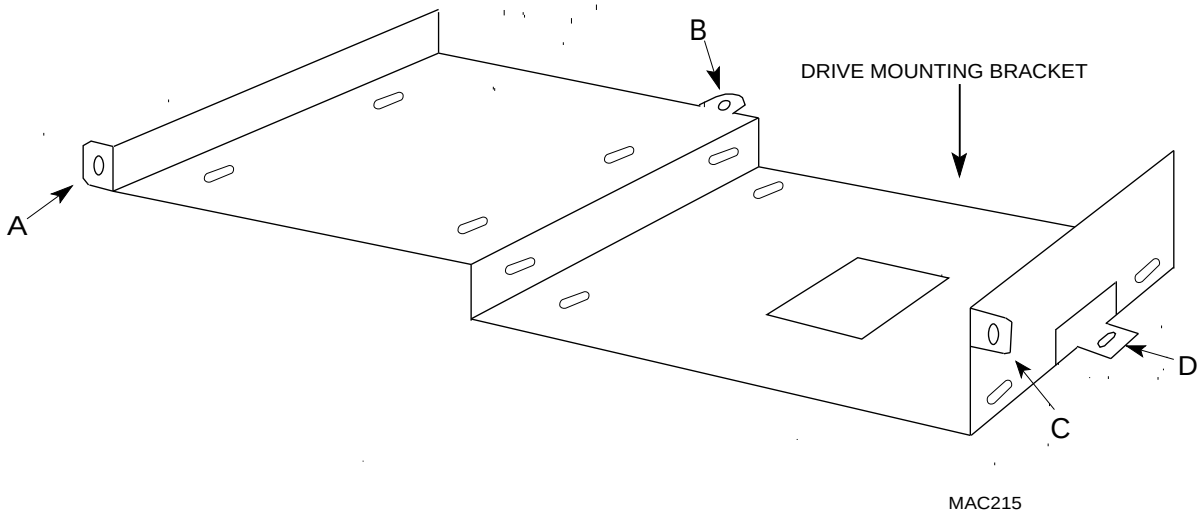

Figure 6

The AM-647 DAT drive installs on top of the drive mounting bracket as shown in Figure 7. Because the DAT drive internally ties logic ground to its frame, it is necessary to isolate the DAT drive from the computer chassis. The mounting kit includes an isolator designed to prevent the AM-647 drive from making metal to metal contact with the computer chassis.

The isolator (part number DWF-20713-00) must be folded and positioned as shown in Figure 7, with the part number facing up and forward. The isolator has been scored so the edges can be folded up as shown in the illustration.

The drive sets on top of the isolator and is held in place with four plastic hex screws and metal washers, see Figure 7.

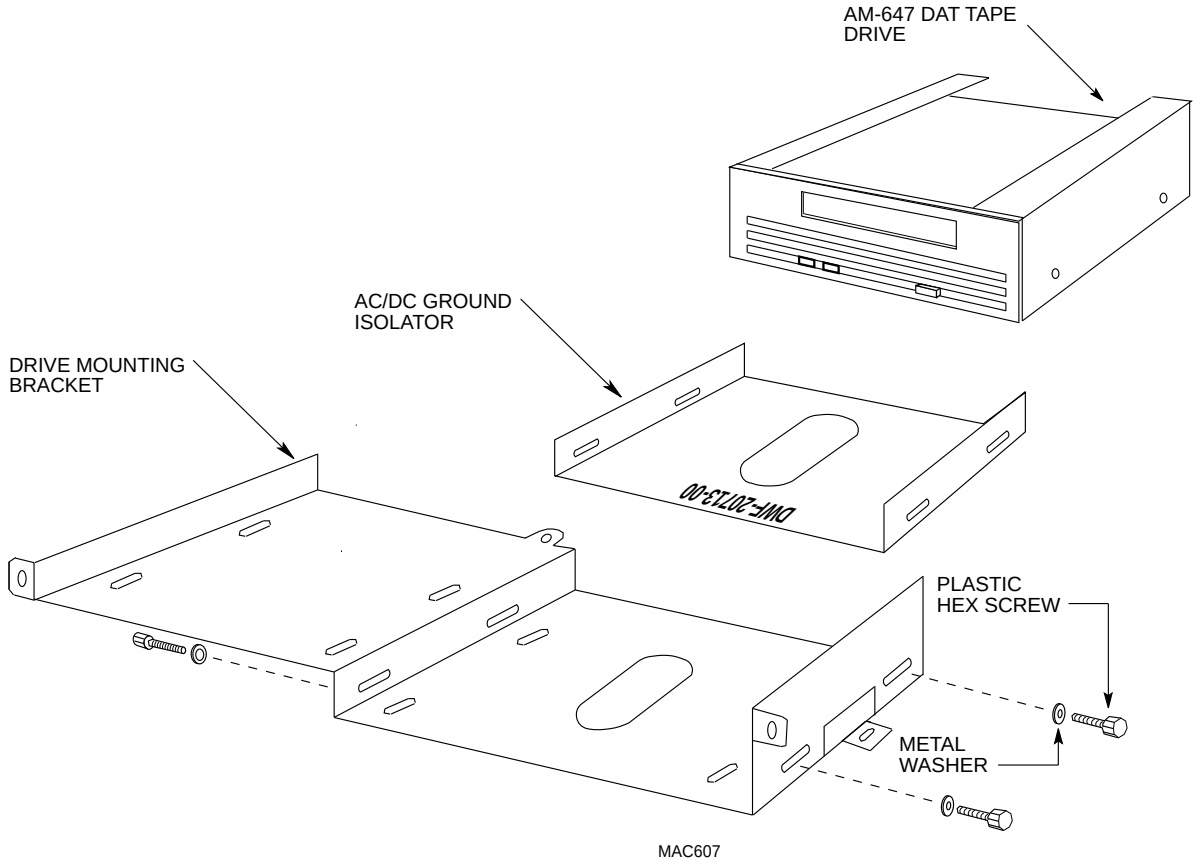

Figure 7

Once the drive is installed on the mounting bracket, place the assembly back into the chassis and re-attach the four screws that hold the mounting bracket in place.

There is a SCSI interface cable with two 50-pin connectors already installed in your chassis. Simply plug the 50-pin connector into the back of the DAT drive. Make sure the red stripe on the cable aligns with pin-1 on the drive. The illustration in Figure 1 shows the pin-1 location on the DAT drive.

The chassis also has two standard four pin power connectors. Plug one of these power connectors into the drive. The power connectors are keyed, so you can't plug them in backwards.

Reinstall the top cover.

10.0 DAT INSTALLATION (UNIVERSAL VME AND SINGLE BOARD COMPUTERS)

The plastic mounting rails are the key to installing a DAT tape drive into an AM-990 Universal Enclosure computer. Two rails are required to mount a peripheral device. The rails (DWF-20652-00) are universal; they can be mounted on either the right or left hand side of the peripheral. Figure 8 shows an illustration of the rail and explains how it is installed on various types of peripherals, including the AM-647 DAT tape drive:

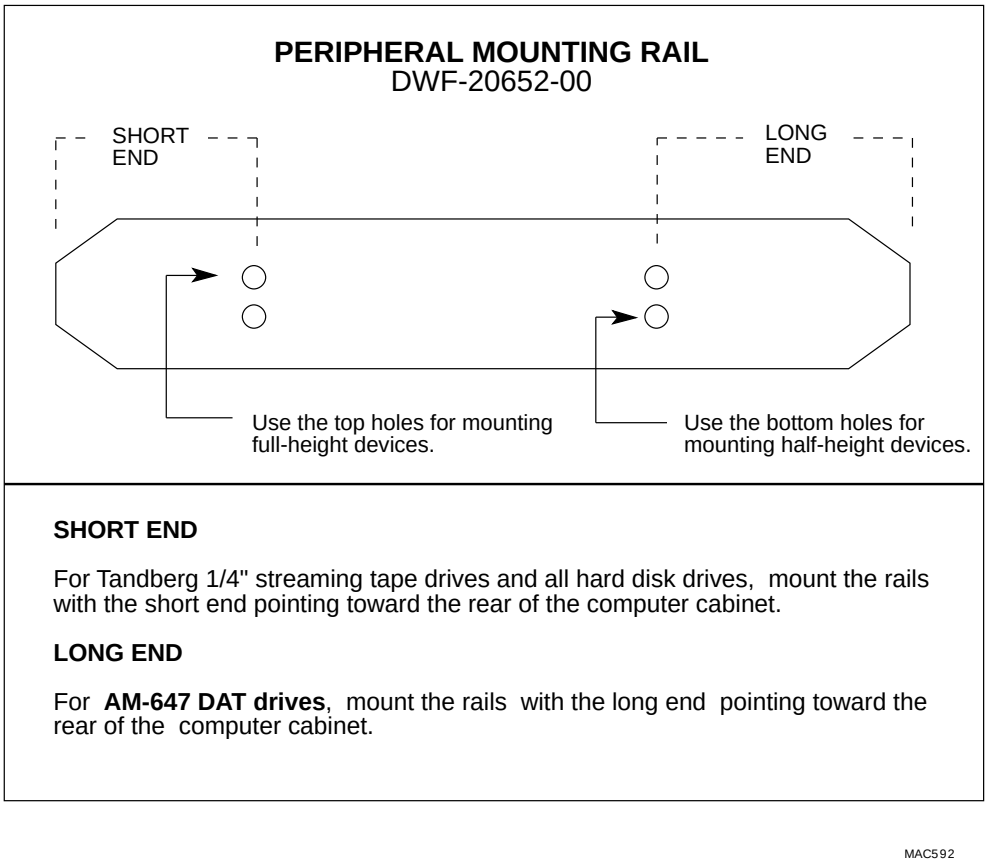

Figure 8 — Peripheral Mounting Rails

Figure 9 shows the basic peripheral/rail assembly. Besides the rails, the peripheral mounting kit includes both standard and metric screws for compatibility with all of Alpha Micro's 5-1/4" peripherals.

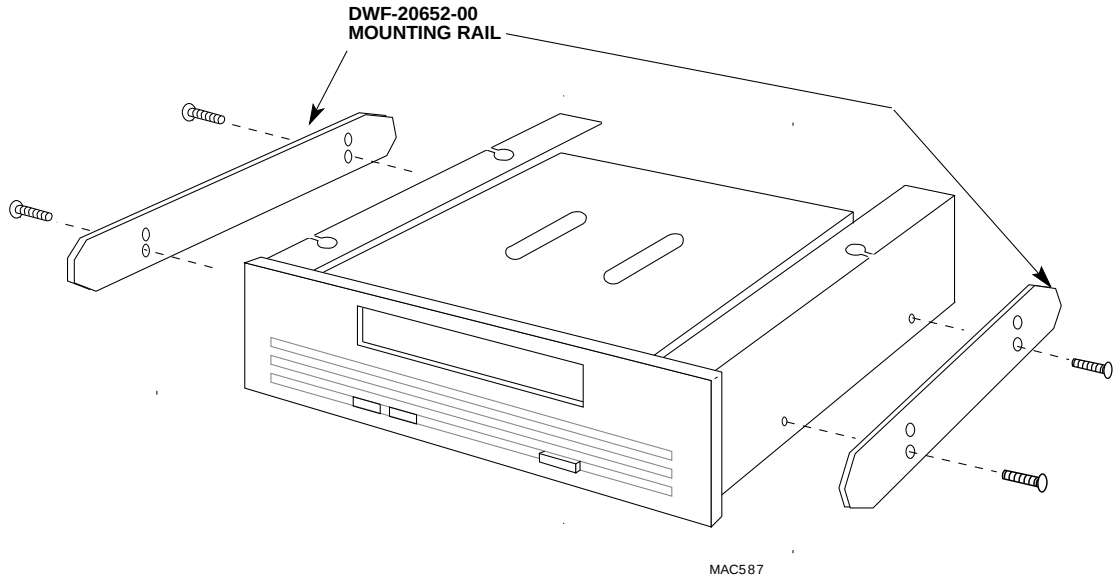

Figure 9 — Attaching Mounting Rails to Peripheral

Once the rails are installed, the tape drive can be slid into its mounting position in the chassis. Make a pin-1 to pin-1 connection between the SCSI connector on the back of the drive and the interface cable; plug in the power cable and the installation is complete.

11.0 SOFTWARE INFORMATION FOR AM-647 DAT DRIVES

There are several points to remember when using DAT drives:

- You can only use one AM-647 DAT drive in your computer. However, the DAT drive can be used in conjunction with a Tandberg streaming tape drive.
- The AM-647 is not supported in S-100 bus, AM-1000, and AM-1200 computers.
- The DAT drive must be used with AMOS operating systems no earlier than 1.4 or 2.2.
- The tape drive must be referred to as DAT0:
- The device driver program, DAT.DVR, must be loaded into system memory.
- Roadrunner, AM-4000, and AM-540 enhanced AM-3000M computer support SCSI IDs 0 through 6. All other AMOS based computers support SCSI IDs 0 through 3. If you want to WARMBOOT from your DAT drive, it must be addressed to a higher numerical SCSI ID than any other magnetic tape device on the bus.

- The DAT drive uses the same tape utility programs used by Alpha Micro's 1/2" magnetic tape drives; MTUSAV, MTUDIR, and MTURES. The use of these programs is documented in the *System Operator's Guide*.

  The following versions of software (or later) are required to support AM-647 DAT tape drives. If your AMOS operating system does not include the versions of the software listed below, you will need to download a hardware support tape that includes these files or obtain the files from Alpha Micro's Technical Support Group via AMTEC+.

For AMOS 1.4 Systems	For AMOS 2.2 Systems
647DVR.DVR	647DVR.DVR
MTUSAV.LIT 3.0(121)	MTUSAV.LIT 3.1(121)
MTURES.LIT 3.0(124)	MTURES.LIT 3.1(124)
MTUDIR.LIT 3.0(117)	MTUDIR.LIT 3.1(117)
TAPSER.LIT 3.0(115)	TAPSER.LIT 3.0(115)
WRMGEN.LIT 2.0(138)	WRMGEN.LIT 2.0(140)
FWUPD.LIT 1.0(100)	FWUPD.LIT 1.0(100)
CRT620.LIT 2.0(112)	CRT620.LIT 2.0(112)

11.1 Copying the Device Driver Program

You need to make a copy of the driver you require under a three character name so AMOS can associate it with the device name you are going to put in your system initialization file, type:

```
LOG DVR: RETURN

COPY DAT.DVR=647DVR.DVR RETURN
```

11.2 Modifying the System Initialization Command File

To define the DAT drive to your computer, use the COPY command to make a copy of your system initialization command file, calling it TEST.INI. Then edit that copy using the AlphaVUE text editor, making the modifications discussed in the following sections.

NEVER modify the system initialization command file directly. Always make a copy and name it, for example, TEST.INI. Make the modifications described below in that test file. When you have finished, use MONTST at AMOS command level to test it. If it fails, you can push the reset button to return to your standard initialization file.

If you modify your AMOSL.INI or AMOS32.INI file directly and make a mistake, the system may not boot at all. If the MONTST is successful, you can then rename the test command file to AMOSL.INI or AMOS32.INI.

Type the following commands to create a test initialization file. For example, if your computer runs under AMOS/32, enter:

```
LOG SYS: RETURN

COPY TEST.INI=AMOS32.INI RETURN
```

Make sure your system backup media contains the DAT drive software files in case you need to restore your system.

11.2.1 Modifying the Device Table

The first thing you need to do in your TEST.INI file is add a new DEVTBL statement. When used in the system initialization command file, DEVTBL tells AMOS which devices to look for on the computer. As AMOS processes the DEVTBL command line, it builds a device table in memory. The file system consults the device table for device assignments. Every time you add a new device to the system, like your DAT drive, you must add it to the system device table.

Locate the DEVTBL statements in your TEST.INI and add one that looks like this:

```
DEVTBL /DAT0
```

The slash preceding the device name lets AMOS know the device is non-sharable.

Since the device driver program needs to be in System Memory, add the following SYSTEM command prior to the final SYSTEM command:

```
SYSTEM DAT.DVR[1,6]
```

The MTUSAV program creates a special job used to communicate with the tape drive when it is executed. Having these two jobs run (one to select files and one to communicate with the DAT drive) allows the extra performance you should see when using MTUSAV.

To increase the number of jobs allocated by the system, search for the line which reads:

```
JOBS nnn
```

This line is normally one of the first commands in the .INI file. Increase the number of jobs allocated by one.

11.3 Testing the Initialization File

When you have finished editing the TEST.INI file, and the new DAT tape drive is attached to the computer with its address jumpers and terminators set properly, press the [ESC] key and enter an [F] at AlphaVUE command level to exit. Then log into OPR: (make sure everyone is off your system) and use MONTST to test the TEST.INI file.

When your computer executes the DEVTBL statement, `DEVTBL /DAT0`, located in your system initialization command, it will display what tape drive was detected and its address. For example:

```
AM-647 DAT found at SCSI ID: 3
```

If the computer boots successfully, enter the DEVTBL command at AMOS command level to see a display of the devices on your system; the DAT drive should be listed in the display as DAT0.

If the computer doesn't boot successfully, or if the DAT drive does not appear on the DEVTBL display, press the RESET button to reboot the computer under its original initialization file. Review the changes you made to the TEST.INI, and verify the DAT drive is cabled correctly, and its address jumpers are properly set.

11.4 Warm Booting

It's possible to warm boot from your DAT drive on all Alpha Micro computers listed below, as long as your computer contains the correct boot PROMs. Check the revision of your CPU's boot PROMs with the minimum revision levels in this table:

AM-134-XX	Rev. A00
AM-175	Rev. G02
AM-135-XX	Rev. A00
AM-180	Rev. D02
AM-145	Rev. B02
AM-185	Rev. A01
AM-185(-50)	Rev. A00
AM-140	Rev. A00

There are no special software considerations to take into account when you use WRMGEN to create your .WRM warm boot file. Keep in mind the DAT drive must be addressed to a higher numerical SCSI ID than any other magnetic tape device on the bus.

When you want to warm boot from the DAT drive, you must set the alternate Boot ID switches on the back panel of your computer chassis. The correct switch setting is shown Figure 10 for each of the supported CPU types.

When you use the CRT620 program to create a warm boot tape, the tape will include only the necessary code to perform a warm boot. The CRT620 program will not allow you to save any data to the tape.

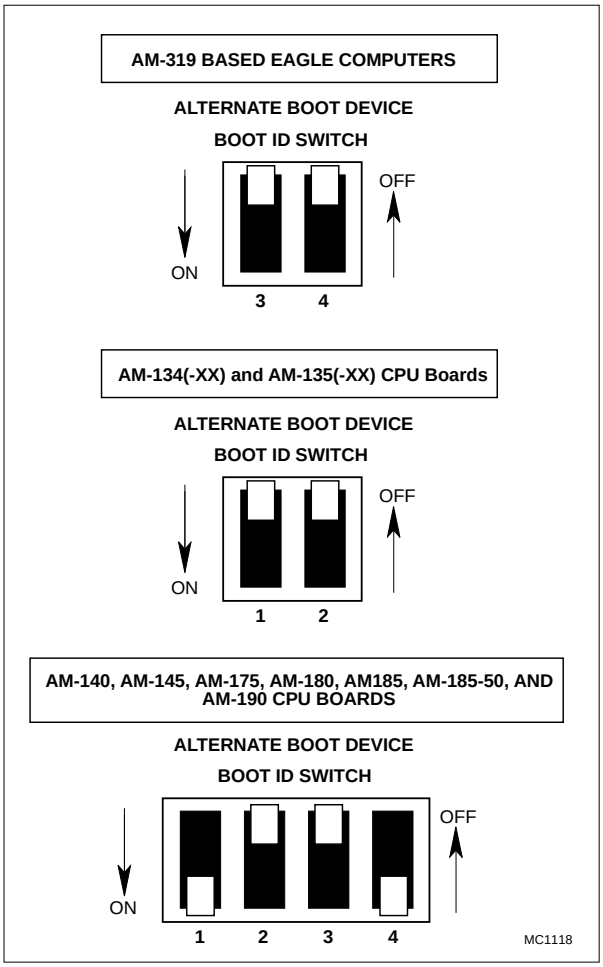

Figure 10

11.5 Initial System Testing

Since you had to move the computer to install the DAT drive subsystem, you may want to run the system self test, once the computer is up and running, to be sure your computer system is operating correctly. Refer to your computer Owner's Manual for complete step-by-step instructions and interpretation of the self test.

12.0 AM-647 DAT DRIVE STATUS LEDS

The front panel of the AM-647 DAT drive has two status LEDs. One LED indicates drive status, while the other LED indicates cassette status. These two indicators provide operational information for normal as well as error conditions.

The amber Drive Status LED indicates the following conditions:

- When ON (lit), the drive is reading or writing the tape.

Never press the tape eject button while the amber LED is on.

- When flashing rapidly, a hardware fault occurred or dew was detected. If dew is detected the tape is ejected.

The green Cassette Status LED indicates the following conditions:

- When ON (lit), a cassette is inserted and does not generate excess errors.
- When flashing slowly, a cassette is inserted but generates excessive errors beyond the predefined DDS error threshold. A new tape should be used for future writes and/or the tape heads should be cleaned with an approved DDS cleaning cassette. Otherwise, operation is proceeding normally. This signal is a warning only.
- If the LED is flashing rapidly, this indicates the tape could not be written to correctly (maximum rewrite count exceeded.) The WRITE operation failed, and you should replace the cassette. (Or, the heads may need to cleaned with a DAT cleaning cassette.)
- When flashing slowly in conjunction with the amber LED, a prerecorded audio tape cassette is inserted and is being played automatically.
- **Note that audio DAT tapes can only be heard by using an external digital to analog converter, which is currently unavailable.**

LED	Action	Meaning
Amber	ON (lit)	The drive is reading or writing the tape.
Amber	Flashing Rapidly	A hardware fault occurred, or dew was detected.
Green	ON (lit)	A cassette is inserted and does NOT generate excess errors.
Green	Flashing slowly	A cassette is inserted but generates excessive errors beyond the predefined error threshold. (Warning only).
Green	Flashing slowly (with amber LED)	A prerecorded audio cassette is inserted and being played automatically.
Green	Flashing rapidly	The drive could not write the tape correctly. (Error)

13.0 USING YOUR AM-647 DAT DRIVE

The DAT drive is very simple to use:

1. In order to save data to the tape, the window on the tape cartridge must be in the write enable position. Figure 11 shows the tape window in both "write enable" and "write protected" positions.

2. The 4mm tape inserts as shown in Figure 11. As you insert the tape through the tape door, the DAT drive takes over the load operation by mechanically pulling the tape cartridge into the load position, just like your home VCR.

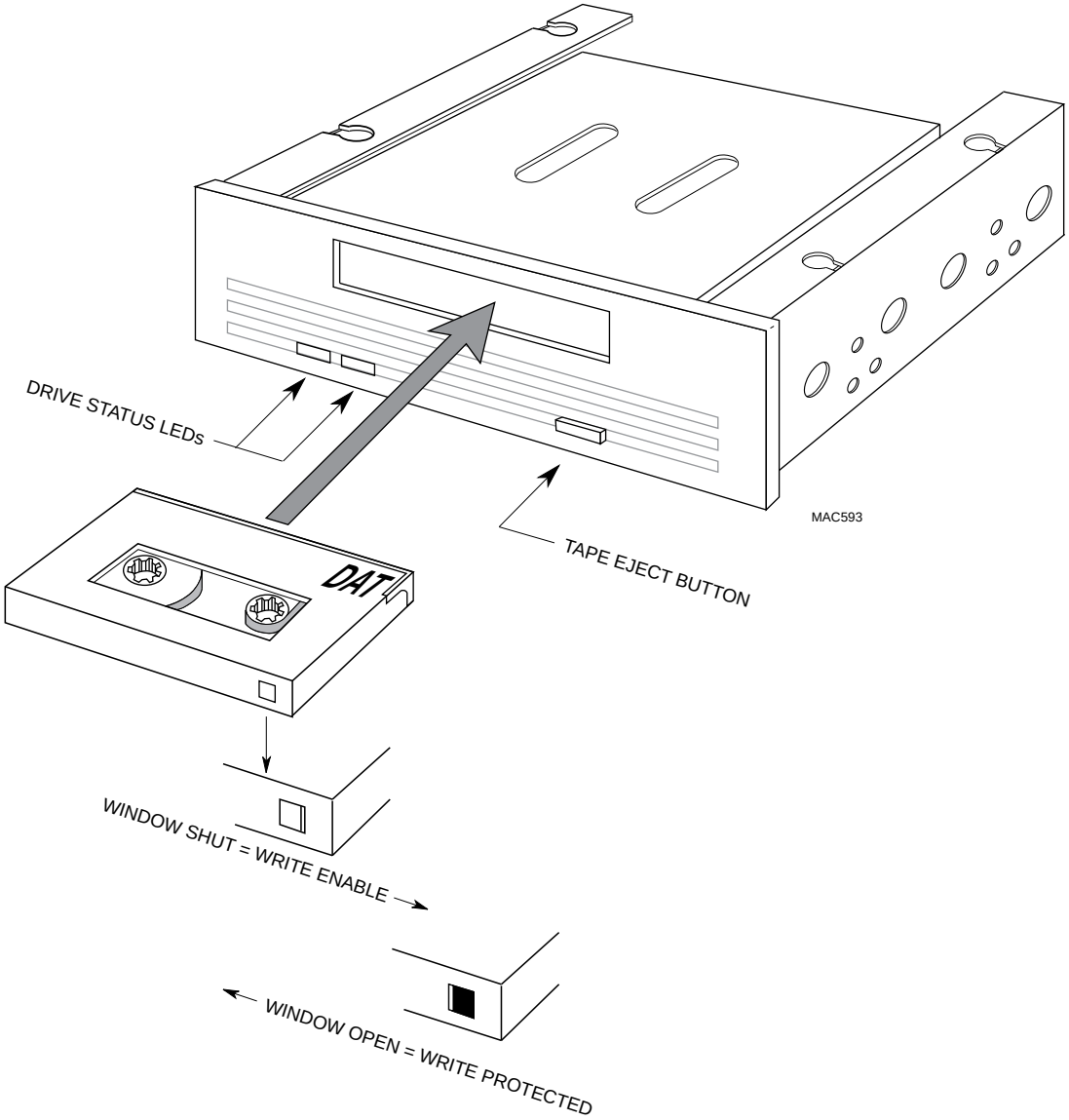

Figure 11. DAT AM-647 Tape Drive.

3. Once the tape is loaded, the status LEDs will indicate the status of both drive and cassette.

4. Use the MTUSAV command to copy a few files onto a blank tape cartridge, and then use the MTURES command to restore them into a different disk account, or onto another logical disk. The MTUDIR command will list the files stored on the tape cartridge.

5. To unload the tape cartridge from the AM-647 DAT drive, you press the tape eject button, which is shown in Figure 11. The drive will automatically eject the tape.

14.0 MAINTENANCE

If excessive magnetic dust and debris collects on one or more of the heads, magnetic media may become unreadable and unwriteable. This situation may occur infrequently, or not at all, depending on the media used.

Whenever the cassette status LED flashes, you should clean the drive heads with a cleaning cassette.

As routine maintenance, the drive heads should be cleaned after every 50 hours of operation.

To clean the heads on the AM-647 DAT drive, use only an Archive-qualified DDS DAT cleaning cassette designed for your drive. Archive offers a cleaning cassette, model M7301, that can be ordered directly from Archive.

The DDS cleaning cassette contains the correct recognition holes to allow the AM-647 DAT drive to recognize that it is a cleaning cassette.

Follow these general guidelines to use the cleaning cassette:

1. Insert the cleaning cassette into the DAT drive. The drive will immediately detect that this is a cleaning cassette.

2. The drive will load and run the cassette in about 10 seconds, then the cassette will be ejected.

3. Each time the cleaning cassette is used it will advance to an unused portion of the tape. Eventually the entire cleaning tape will be used up. One cleaning cassette provides about 100 head cleaning operations.

Do not use an audio DAT cleaning cassette. It will not be properly recognized by your AM-647 DAT drive.

15.0 DDS TAPE USAGE AND CAPACITY

All tapes used in the AM-647 DAT drive should be **computer grade**. Low cost tapes designed for audio DAT drives should **never** be used with the AM-647. Computer grade DAT tapes are made of better materials and therefore will show a lower rate of data errors than audio quality DAT tapes. The computer quality DAT tapes do not "shed" as much magnetic material compared to audio quality DAT tapes and therefore less head cleaning is required. By using computer grade tapes you reduce the possibility of damaging the DAT drive tape heads.

A number of different size tapes are available for the AM-647 DAT drive. We strongly recommend using only 60 and 90 meter tapes. These two tapes yield capacities of approximately 1.3 and 2.0 gigabytes respectively. Some DAT vendors sell other length tapes, such as a 7.5 meter tape with a capacity of 162 megabytes. With the short tapes

the AM-647 is not able to calculate the end of tape position. If the data you are saving exceeds the tapes capacity, data will be lost. The short tapes should not be used in the AM-647, unless you follow these rules:

1. Insure the data you will be transferring to these tapes is at least 20 percent less than the stated capacity on the tape. For example, on a 324 megabyte tape only attempt record 256 megabytes of data.

2. Never attempt to span over small tapes. The MTUSAV program will abort if you attempt to do this.

3. Insure all critical data is saved onto 60 or 90 meter tapes. Alpha Micro does not guarantee functional backups using smaller tapes.

4. Alpha Micro stocks the 60 meter (1.3GB) tape under part number PRA-00185-00; the 90 meter (2.0GB) tape is stocked under part number PRA-00184-00.

16.0 ADDITIONAL DOCUMENTATION

There are a number of other documents in the Alpha Micro Documentation library, often far more expanded or tutorial, that amplify the concepts discussed in this document.

Your primary reference source should be your computer Owner's Manual. Subjects in this document that are thoroughly covered in the owner's manual:

1. Physical and electrical specifications.

2. Cooling and system placement.

3. Power requirements and power conversion.

4. Performing the self test.

Another useful document is your *System Commands Reference Manual*. In it you will find reference sheets for the AMOS system software programs and commands mentioned in this document. See your *System Operator's Guide* for a wide variety of system information.